37 770 000 **RAPID L FOR WASH BASIN**

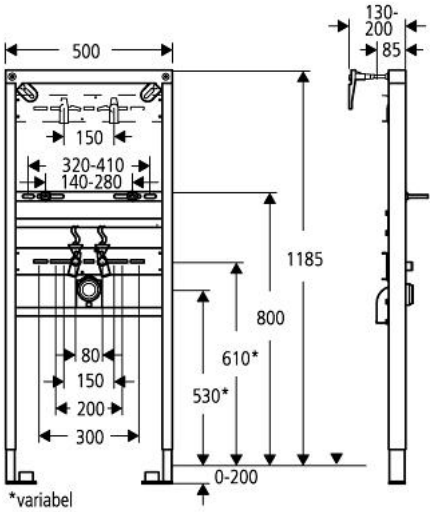

PRODUCT DESCRIPTION

- for single hole installation or wall mounted fittings
- 1.20 m installation height
- for on-the-wall installations or studded walls
- powder coated steel frame, self-supporting
- for dry-cladding, completely pre-assembled
- with fixed connections
- for single or rail installation
- fixing material
- TÜV approved
- wash basin fixing bolts M10 with fixing device for ceramic
- variable distance of fixing bolts
- HT-outlet bend DN 50
- seal Ø 32 mm
- 2 noise protected fitting connections ½"
- accessories for on-the-wall installation